industrial/wireless/performance

Supplemental Data

MDS TransNET Board-Only Version

Microwave Data Systems Inc., 175 Science Parkway, Rochester, NY 14620 USA
Tel. 585.242-9600 FAX 585.242-9620 www.microwavedata.com

INTRODUCTION

The TransNET 900 board-only radio is electrically and operationally similar to the standard (metal enclosed) version described in the MDS 05-2708Axx instruction manual. Refer to the standard manual for connector assignments, software commands and other product information. This supplement explains the items that are unique to the board-only radio.

Figure 1. MDS TransNET 900 Board-Only Transceiver

Product Differences—Board-only vs. Standard

The main differences between the board-only unit and the standard version are physical—including overall dimensions and mounting hole spacing. In addition, the board-only unit's LED panel is positioned differently than on the standard unit. The LED order and functionality remain the same, however.

Finally, the board-only unit is not intended for high duty cycle applications such as may be required in some master station and repeater arrangements (see note below). This is due to heat dissipation requirements.

NOTE

The board-only unit is not suitable for extremely high duty cycle applications. For master station or repeater use, where transmit duty cycles could approach 50%, it is recommended that a standard (metal enclosed) TransNET be utilized.

Unit Dimensions

The TransNET board-only radio is designed to fit into restricted spaces, and is considerably smaller than the metal enclosed version. The dimensions of the unit (excluding connectors) are as follows:

Height: 0.906 in. (2.3 cm)
Width: 5.063 in. (12.9 cm)
Depth: 3.563 in. (9.1 cm)

CAUTION: The bottom of the board-only radio is **not** insulated. When mounting the unit, ensure that no protruding objects will contact the bottom of the circuit board.

Mounting Requirements

The radio may be mounted to any flat surface using four sheet metal screws, machine screws or other suitable fasteners. Fasteners are not supplied with the radio. The radio should be mounted in a manner that permits easy access to the connectors and viewing of the status LEDs.

Figure 2 shows the mounting hole spacing for the board-only radio. To prepare the mounting surface for drilling, it may be helpful to use the radio case itself as a template. To do this, position the radio as desired and mark through the mounting holes with a felt-tip pen or similar marking instrument.

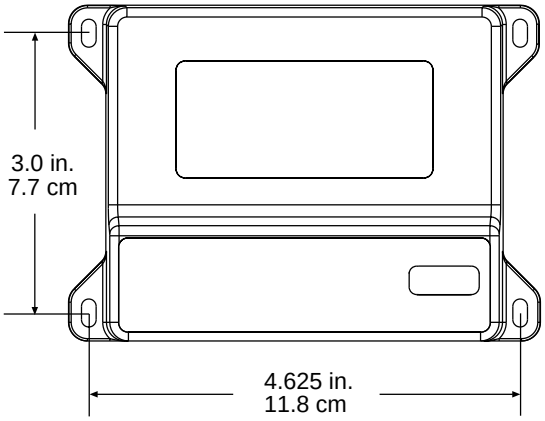

Figure 2. Mounting Hole Dimensions

TECHNICAL ASSISTANCE

Technical assistance for MDS products is available by using one of these methods to contact us:

Telephone: 585.241.5510

FAX: 585.242.8369

E-mail: techsupport@microwavedata.com

Web: www.microwavedata.com

The inside rear cover of the TransNET manual contains additional contact information and procedures for returning the equipment for service, if necessary. When contacting us, please be sure to have the complete model number of the radio available (see top label).